eltherm®

ASSEMBLY INSTRUCTIONS

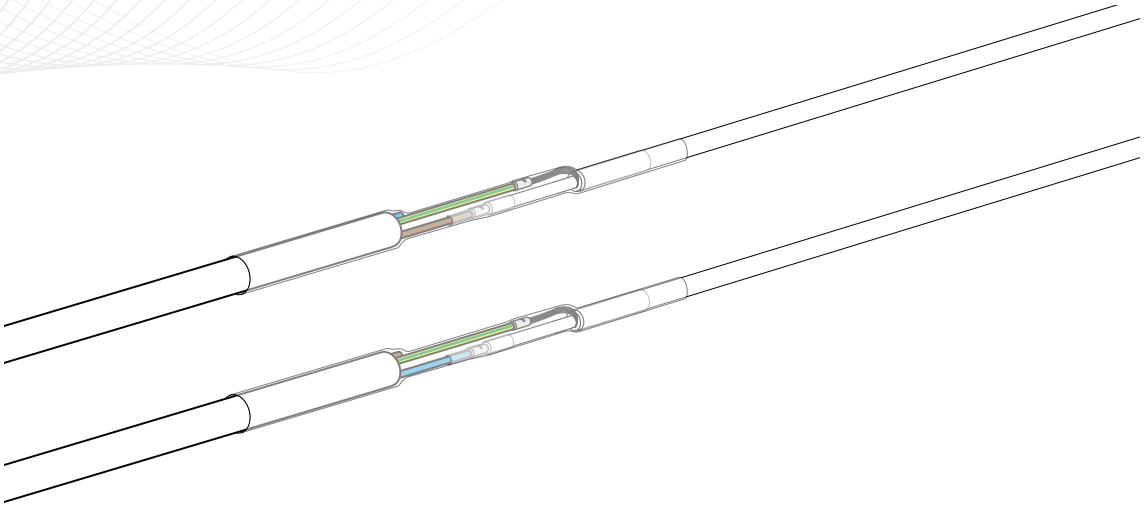

ELVB-30

Connection-Set for single core heating cable
ELKM-AG/ - AG-E/ -AG-L/ -AG-N
with 1.5mm² single core cold supply lead /
supply cable 3x1.5mm²

eltherm GmbH
Ernst-Heinkel-Strasse 6-10
57299 Burbach, Germany
P.: +49 2736 4413-0
F.: +49 2736 4413-50
info@eltherm.com

BU-142
Rev.00

CONTENTS

Topics	Page
RECOMMENDED TOOLS	3
CONTENTS OF CONNECTION SET	3
OPTION 1: HEATING CABLE - COLD CABLE	4
PREPARATION	4
Preparation heating cable (on both sides of the heating cable)	4
Preparation cold cable junction box side (prepare 2 times)	5
Preparation cold cable heating cable side (prepare 2 times)	5
CONNECTION HEATING CABLE - COLD CABLE	6
OPTION 2: HEATING CABLE - POWER CABLE 3x1.5mm²	6
PREPARATION	6
Preparation heating cable (on both sides of the heating cable)	6
Preparation power cable (prepare 2 pices)	7
CONNECTION HEATING CABLE - POWER CABLE 3x1.5mm²	7

IMPORTANT INFORMATION

- RETAIN FOR LATER USE

For proper and safe use of the ELVB-30 connection sets, please follow these instructions.Please keep these instructions for future reference (e.g. in the system documentation).

- FOR DISPOSAL

The WEEE logo indicates that this product must not be disposed of with residential waste.
Further information about disposal and recycling of old electrical and electronic devices and where to find collection points is available from your local disposal company or from the manufacturer from which you bought the product.

ATTENTION

Refers to a potentially dangerous situation.
If it is not prevented, there is a risk of damage or malfunction.

DANGER

Refers to an extremely dangerous situation.
If it is not prevented there is risk of death or at least a high risk of serious injuries.

NOTE

Important information and instructions for safe, effective and environmentally compatible usage.

WARNING

Refers to a dangerous situation.
If it is not prevented there is risk of injury or at least a high risk of material damage.

Proviso
We reserve the right to make technical changes. Changes, errors or misprints shall not form the basis for any claim to compensation for damages. Comply with the applicable and currently valid standards and regulations for safety-related components and systems.

eltherm GmbH
Ernst-Heinkel-Str. 6-10
57299 Burbach
T.: +49 2736 4413-0
F.: +49 2736 4413-50
info@eltherm.com

Document: 8643040911056		BU-142 Assembly instructions ELVB-30	
Author:	Detlef Matthes	Date:	13.02.2024
Revision: **00**		Date:	

RECOMMENDED TOOLS

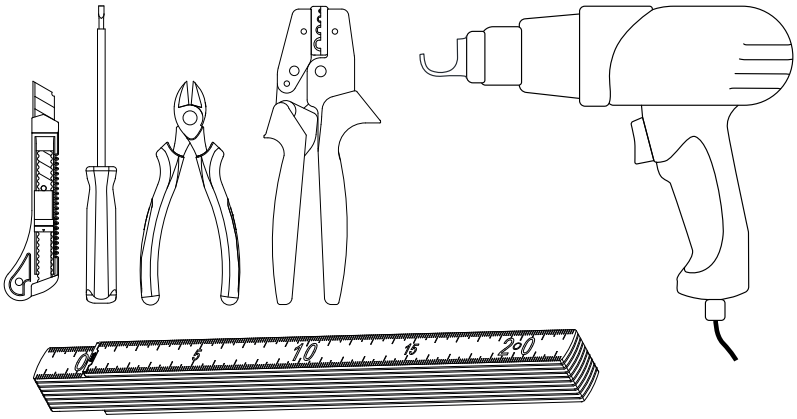

CONTENTS OF CONNECTION SET

ELVB-30 (Art.No. 0911056, for ELKM-AG..)

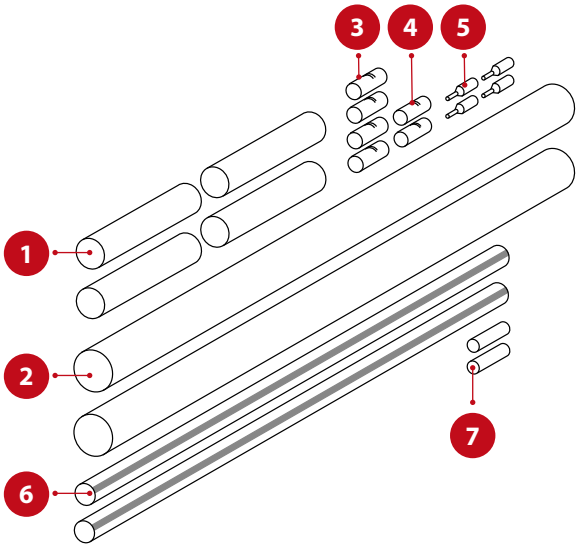

Nº.	Type	Units
1	PTFE-FEP shrink sleeve Ø 6.4 mm; l = 35 mm; transp.	4 Units
2	PTFE-FEP shrink sleeve Ø 8.9 mm; l = 130 mm; transp.	2 Units
3	Nickel sleeve 4.0 x 0.4 x 9.0 mm; blank	4 Units
4	Nickel sleeve 3.2 x 0.4 x 9.0 mm; blank	2 Units
5	Wire end ferrules 1.5 mm^2; l = 8 mm; schwarz	4 Units
6	Shrink tubing Ø = 4.8 mm; l =120 mm; gn/ge	2 Units
7	Shrink tubing PTFE-FEP; Di = 4 mm	2 Units

⚠ ATTENTION

- Work may only be performed by authorised and qualified specialists!
- After work is complete, check the resistance and insulation resistance!
- Use a suitable tool for crimp connector to crimp the nickel sleeves (for example Stocko WZ100 with insert E66 and Klauke EK 35/4 or Klauke HK 4 with die HR 4/6 or equivalent (6mm^2)).

⚠ WARNING

Heat the shrink tubing to 400°C up to 450°C for optimum shrinking results. Avoid temperatures over 500°C: Danger of damage to the outer jacket of the heating cable! We recommend using an adjustable heat gun with baffle plate! Determine a suitable temperature setting of the heat gun by trial and error!

OPTION 1: HEATING CABLE - COLD CABLE

PREPARATION

Preparation heating cable (on both sides of the heating cable)

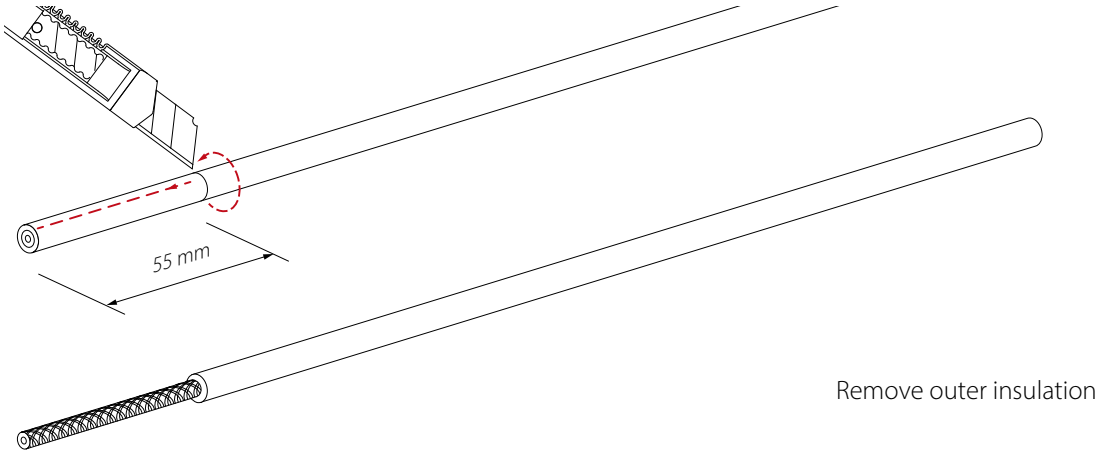

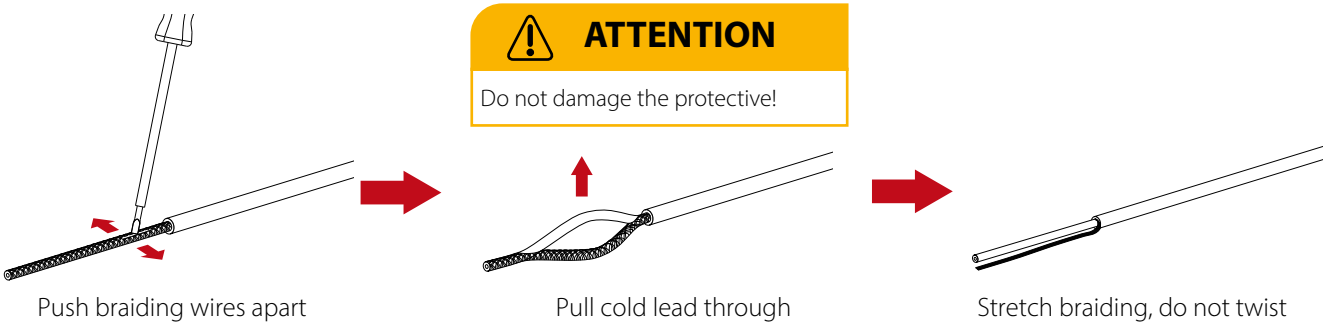

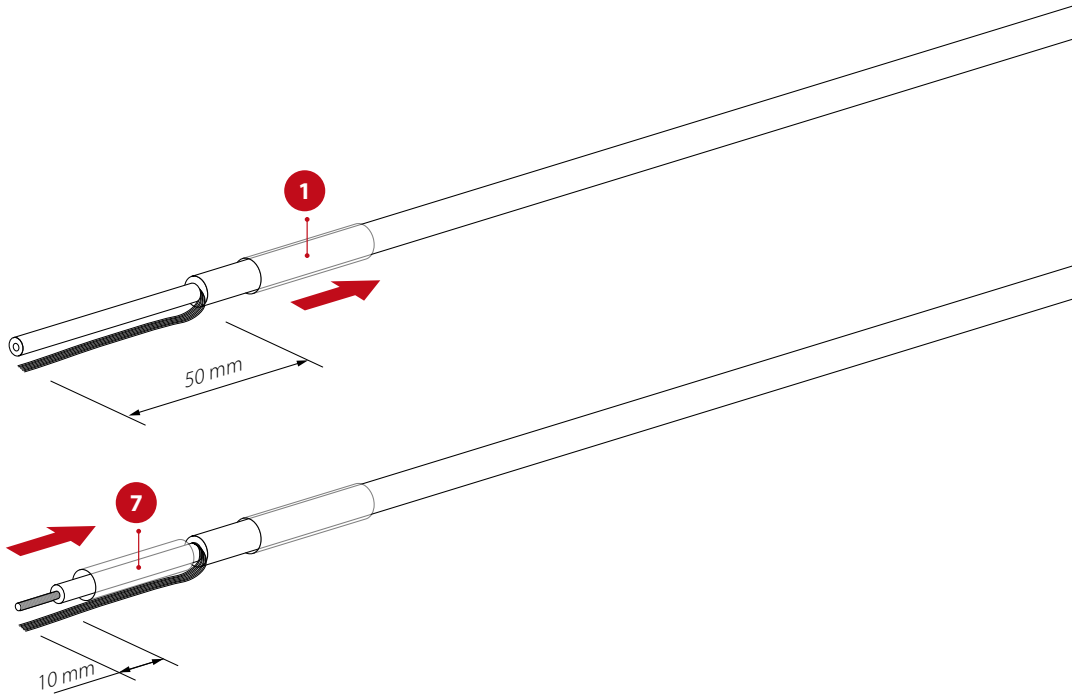

- Slide the shrink tubing (1)
- Slide the shrink tubing (7),
- Shorten the heating conductor to 50 mm and expose the supply conductor by 10 mm.

Preparation cold cable junction box side (prepare 2 times)

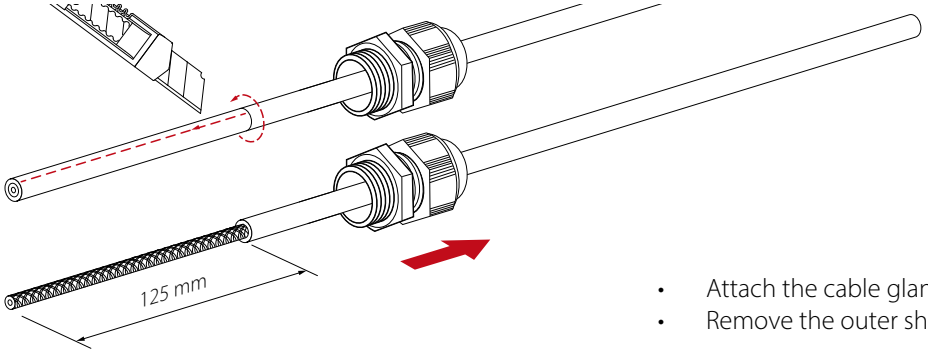

- Attach the cable gland (part of the junction box).
- Remove the outer sheath.

ATTENTION

Do not damage the protective!

Push braiding wires apart | Pull cold lead through | Stretch braiding, do not twist

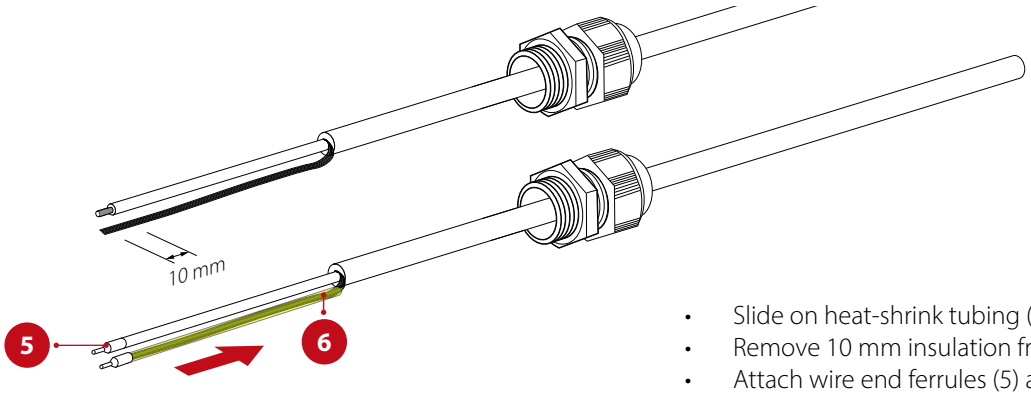

- Slide on heat-shrink tubing (6)
- Remove 10 mm insulation from the supply conductor
- Attach wire end ferrules (5) and crimp.

Preparation cold cable heating cable side (prepare 2 times)

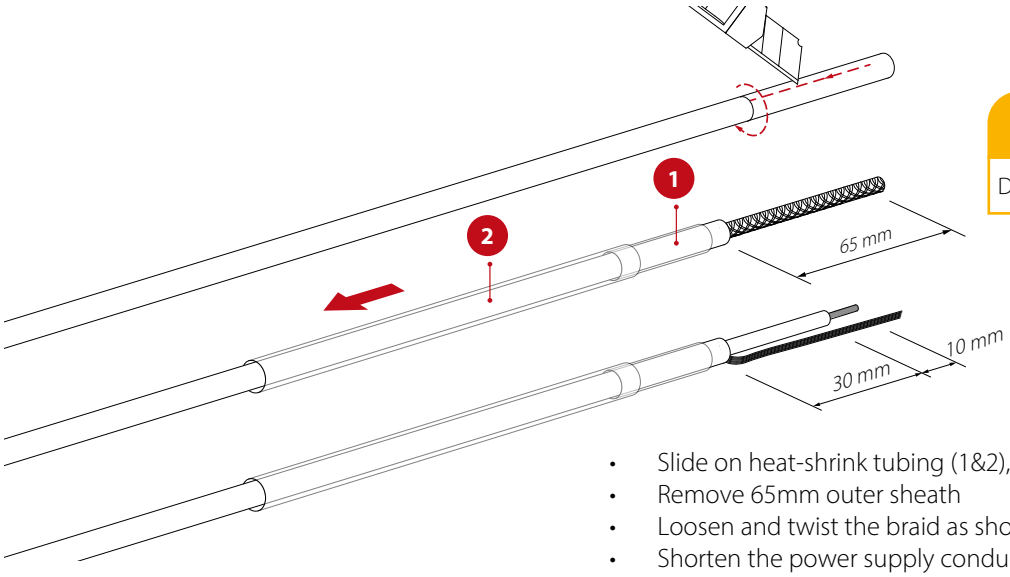

ATTENTION

Do not damage the protective!

- Slide on heat-shrink tubing (1&2),
- Remove 65mm outer sheath
- Loosen and twist the braid as shown on the side of the housing..
- Shorten the power supply conductor to 40 mm.
- Remove 10 mm insulation

CONNECTION HEATING CABLE - COLD CABLE

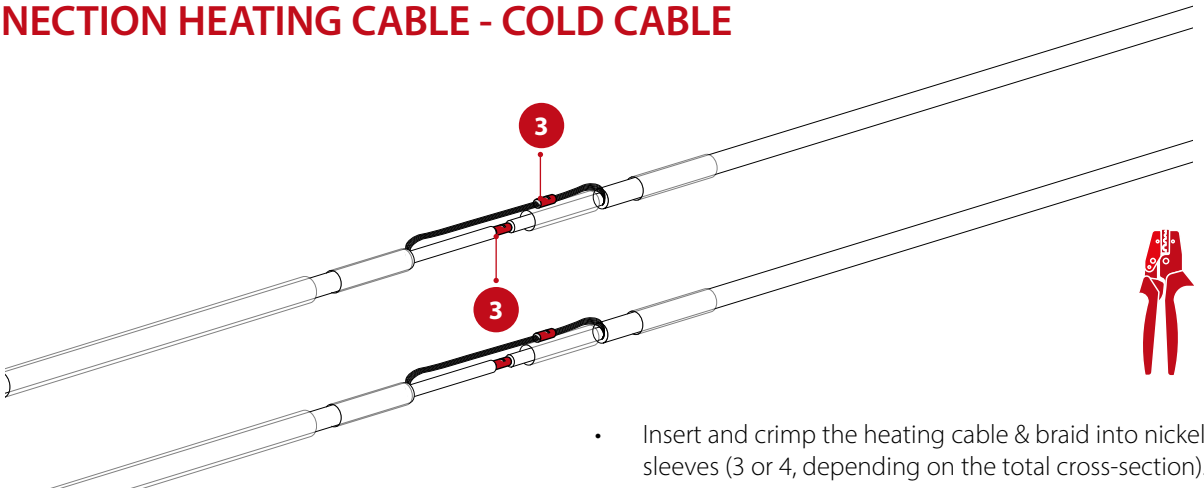

- Insert and crimp the heating cable & braid into nickel sleeves (3 or 4, depending on the total cross-section).

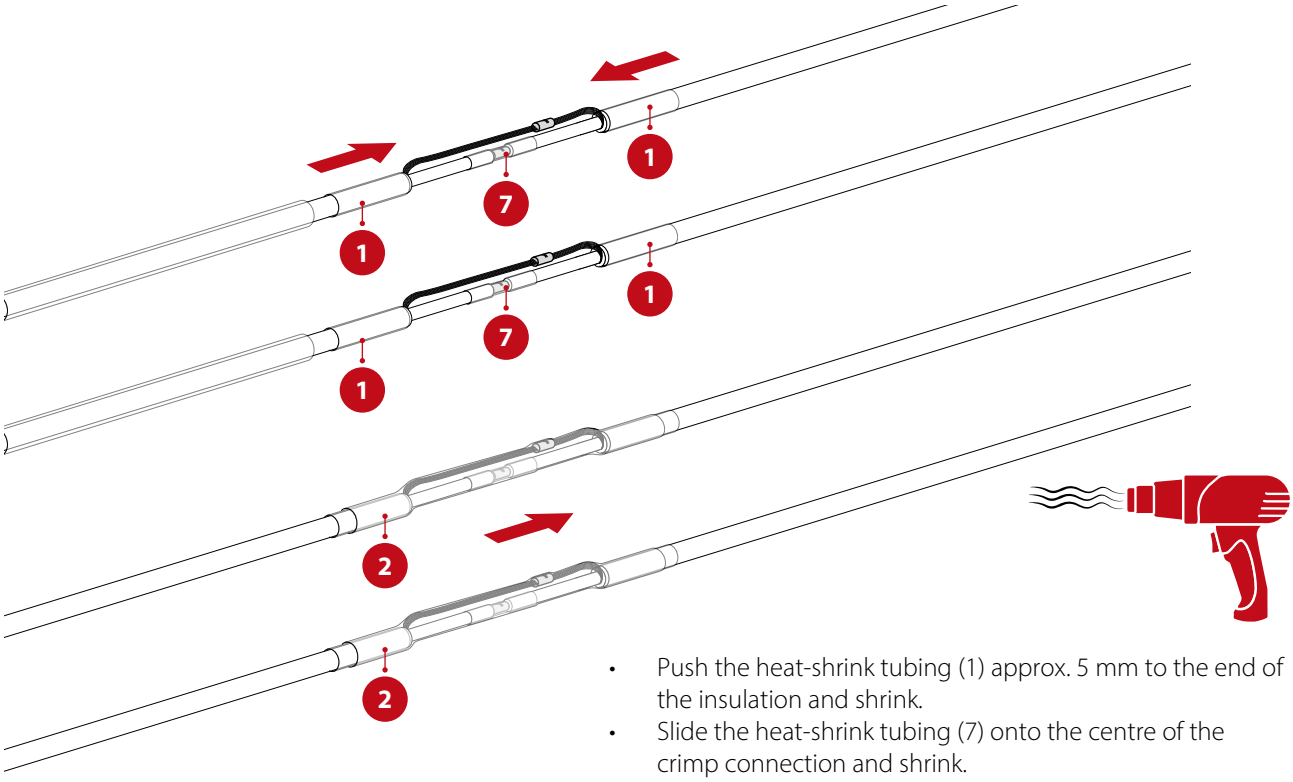

- Push the heat-shrink tubing (1) approx. 5 mm to the end of the insulation and shrink.
- Slide the heat-shrink tubing (7) onto the centre of the crimp connection and shrink.
- Slide the heat-shrink tubing (2) onto the centre of the crimp connection and shrink.

OPTION 2: HEATING CABLE - POWER CABLE 3x1.5mm²

PREPARATION

Preparation heating cable (on both sides of the heating cable)

Prepare the heating cable as described in „OPTION 1: HEATING CABLE - COLD CABLE“.

Preparation power cable 3x1.5mm² (prepare 2 pices)

Junction box side

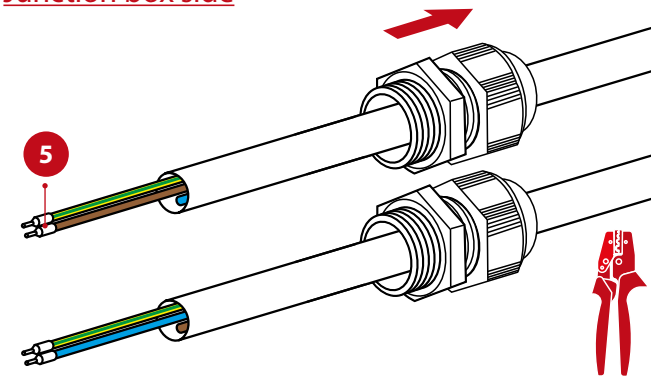

Push on the cable gland (part of the housing).

- For 230V applications:
  Remove 1x blue & 1x brown wire from both supply cable.
- For 400V applications:
  Remove the blue wire from both supply cable.

Fit the wire end ferrules and crimp.

Heating cable side

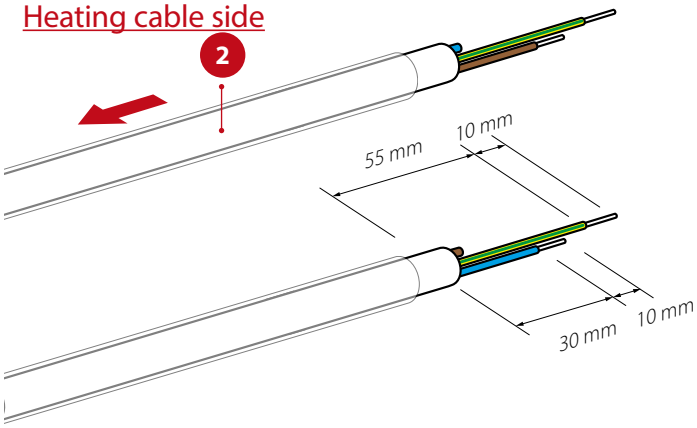

Slide on the shrink tubing (2)

- For 230V applications:
  Remove 1x blue & 1x brown wire from both supply cable.
- For 400V applications:
  Remove the blue wire from both supply cable.

Shorten the wire.

DANGER

Danger of short circuit. Please be sure to check the colours of the conductors before installation.
When using **230 V**, one supply cable must have the green/yellow & blue conductors on both sides for connection, the other supply cable must have the green/yellow & brown conductors on both sides for connection.
For **400 V** applications, both supply cable must have the green/yellow & brown supply conductors on both sides for connection.

CONNECTION HEATING CABLE - POWER CABLE 3x1.5mm²

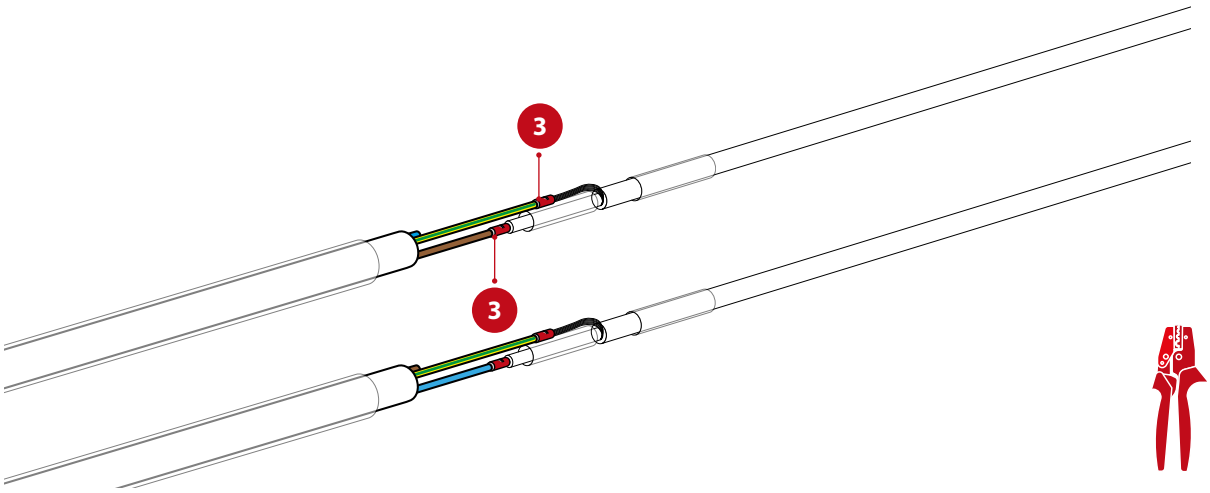

- Insert and crimp the heating cable into nickel sleeves (3 or 4, depending on the total cross-section).

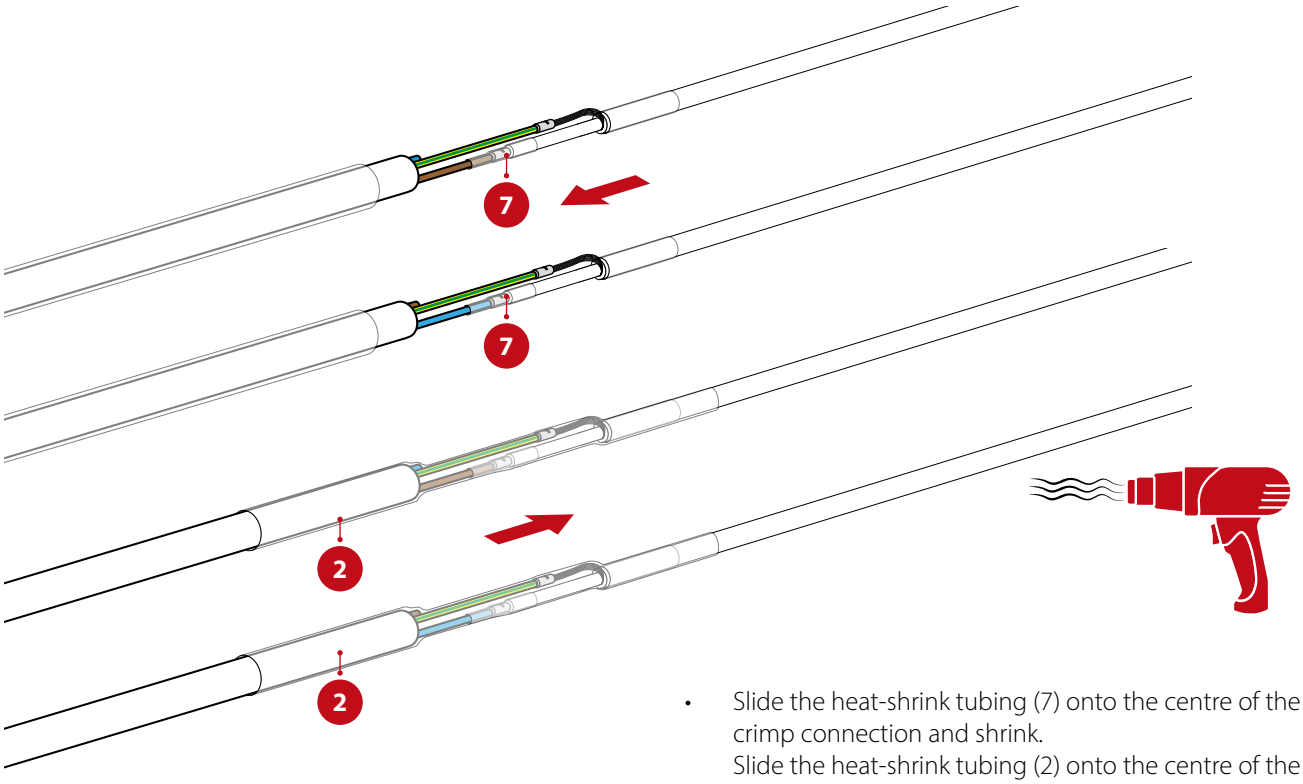

- Slide the heat-shrink tubing (7) onto the centre of the crimp connection and shrink.
  Slide the heat-shrink tubing (2) onto the centre of the crimp connection and shrink.

eltherm GmbH
Ernst-Heinkel-Straße 6-10
57299 Burbach. Germany

T.: +49 2736 4413-0
F.: +49 2736 4413-50
info@eltherm.com

This document can also be found on the eltherm website.
Visit our download area.

8643040911056 Assembly instructions ELVB-30 (BU-142) EN - Subject to technical changes without notice.